CLOSED COMBUSTION FIREPLACE

750Log base/750/750 Insert

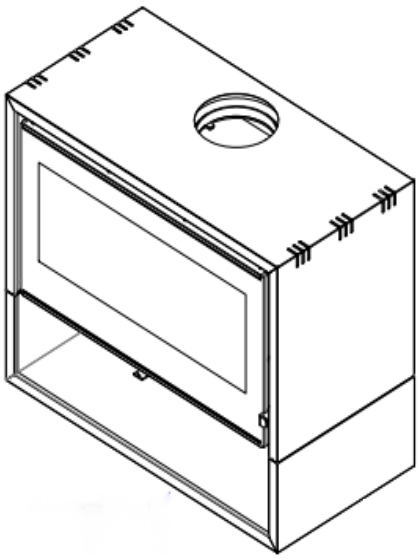

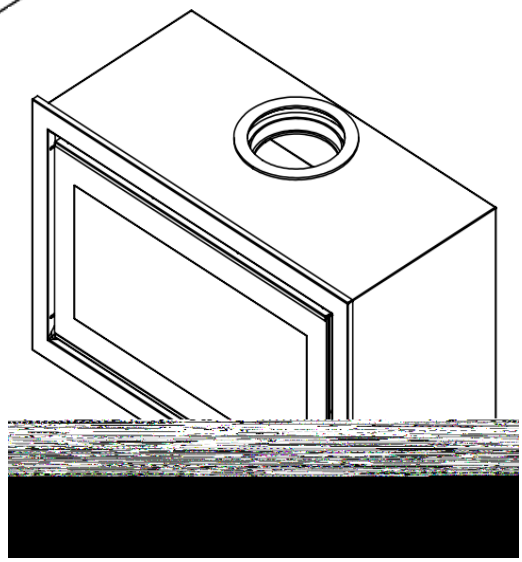

ASSEMBLY & OPERATING INSTRUCTIONS

Important: Read these instructions for use carefully so as to familiarize yourself with the appliance before installing and using it. Keep these instructions for future reference. We reserve the right to make changes to this manual without prior notice.